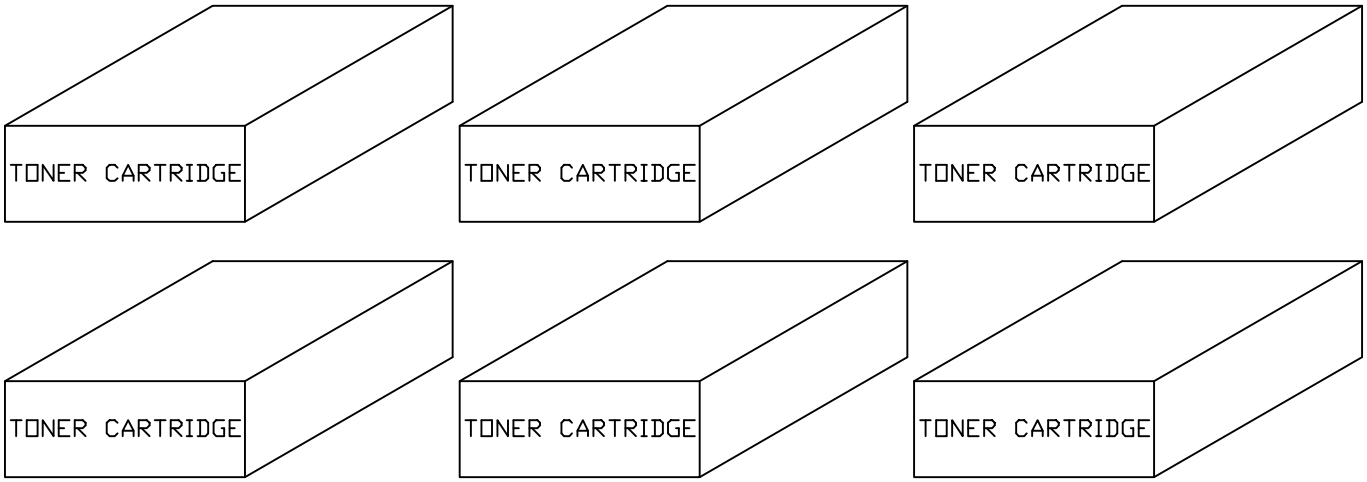

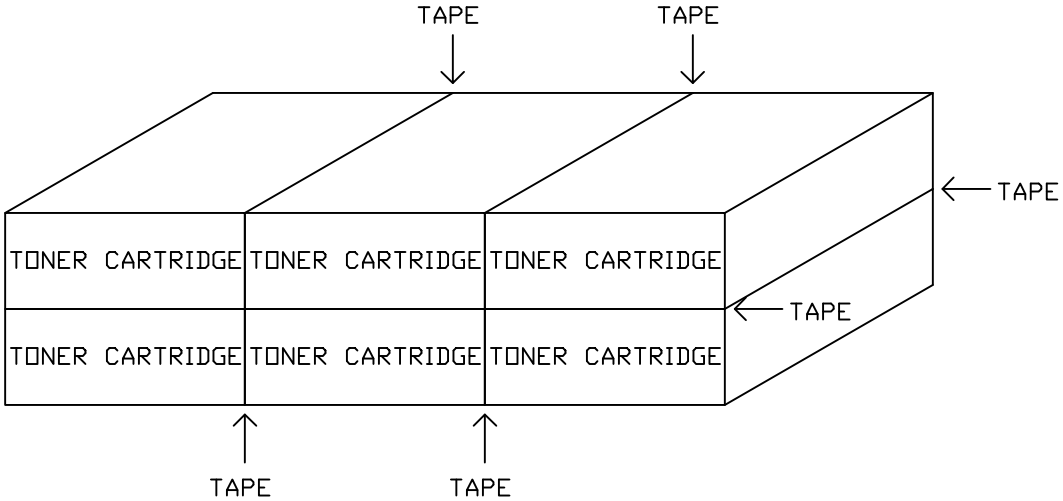
LAY CARTRIDGES 3 EACH
SIDE BY SIDE
PLACE ABOVE THESE 3
CARTRIDGES 3 MORE
CARTRIDGES TO CREATE
A BLOCK OF 6
TAPE ALL SEEMS